Item code 86.D103.4333.02



• Installation and wiring of luminaire must be in accordance with all applicable local codes.
• Installation, inspection, and maintenance of luminaires should be performed by a qualified electrician.
• DO NOT make or alter any open holes in the luminaire. Do not modify the luminaire.
• DO NOT install damaged product.
• Make sure electrical power is OFF before and during installation and maintenance.
• Make sure the equipment is properly grounded.
• Make sure the supply voltage is same as the rated fixture voltage.

1

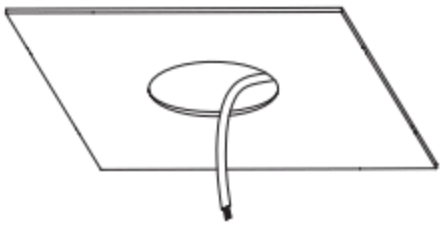

Made cut hole in ceiling accordingly to it's size and make wiring from the power outlet.

2

Put the trimless frame into the cut hole, then fix it to the ceiling by screws.

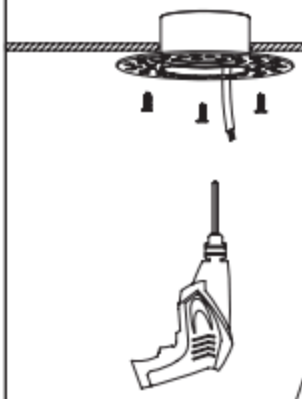







Paint the celing together with the trimless frame after it's fixed.

3

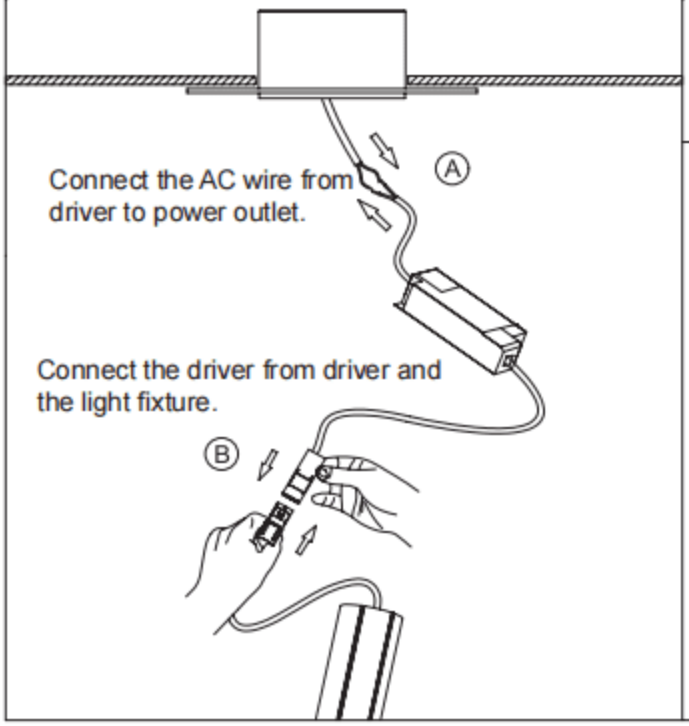

Connect the AC wire from driver to power outlet.

Connect the driver from driver and the light fixture.

4

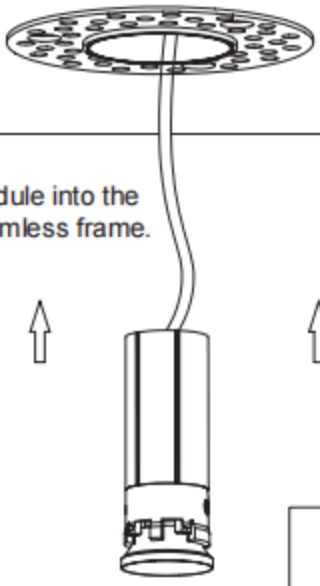

Push the module into the hole of the trimless frame.

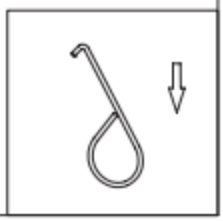

*Accessory hook to take out the module